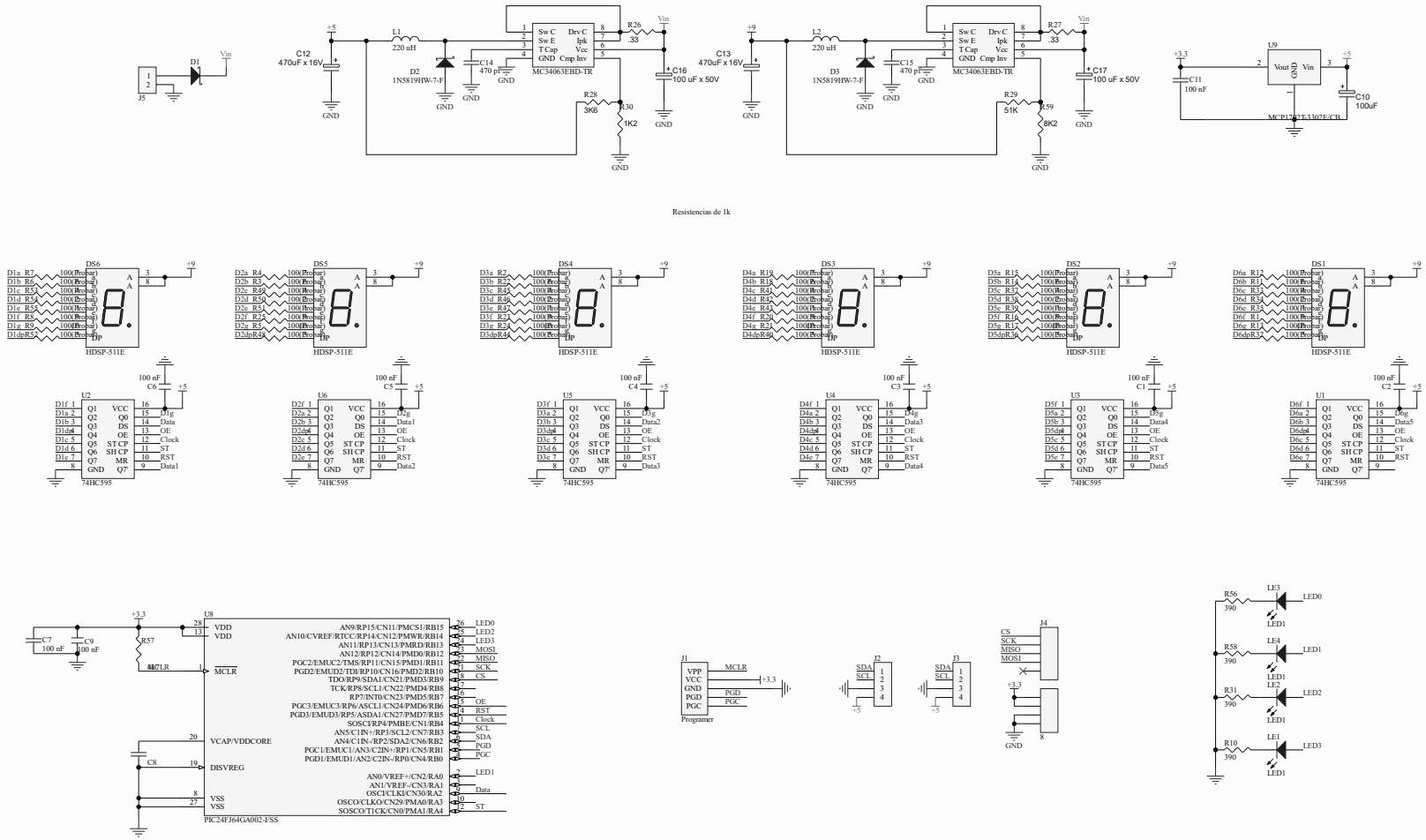

Title		
Size A2	Number	Revision
Date: 5/10/2024	Sheet of	
File: C:\Users\...\Display 7 se 2.3 .SchDoc	Drawn By:	